Kit 75695

Dodge Charger, Challenger, Magnum & Chrysler 300/300C

INSTALLATION GUIDE

For maximum effectiveness and safety, please read these instructions completely before proceeding with installation.

Failure to read these instructions can result in an incorrect installation.

MN-662 • (061110) • ECR 7072

TABLE OF CONTENTS

Introduction

Air Lift Performance thanks you for purchasing the most complete, fully engineered high-performance air suspension made for the Dodge Charger, Dodge Challenger, Dodge Magnum and Chrysler 300/300C. Read these installation instructions to correctly and safely set up the vehicle for a #lifeonair.

Air Lift assumes that the installer has the mechanical knowledge and ability to work on vehicle suspension systems and has basic tools necessary to complete the project. Special tools needed to complete the installation are noted on the Installation Diagram page.

Air Lift reserves the right to make changes and improvements to its products and publications at any time. For the latest version of this manual, contact Air Lift Performance at **(800) 248-0892** or visit **www.airliftperformance.com**.

An Air Lift Performance air management system is highly recommended for this product. Learn more at **air-lift.co/productlines**.

NOTATION EXPLANATION

Hazard notations appear in various locations in this publication. Information which is highlighted by one of these notations must be observed to help minimize risk of personal injury or possible improper installation which may render the vehicle unsafe. Notes are used to help emphasize areas of procedural importance and provide helpful suggestions. The following definitions explain the use of these notations as they appear throughout this guide.

DANGER — INDICATES IMMEDIATE HAZARDS WHICH WILL RESULT IN SEVERE PERSONAL INJURY OR DEATH.

WARNING — INDICATES HAZARDS OR UNSAFE PRACTICES WHICH COULD RESULT IN SEVERE PERSONAL INJURY OR DEATH.

CAUTION — INDICATES HAZARDS OR UNSAFE PRACTICES WHICH COULD RESULT IN DAMAGE TO THE MACHINE OR MINOR PERSONAL INJURY.

NOTE — *Indicates a procedure, practice or hint which is important to highlight.*

Important Safety Notices

WARNING — DO NOT INFLATE AIR SPRINGS WHILE OFF OF THE VEHICLE. DAMAGE TO ASSEMBLY MAY RESULT AND VOID WARRANTY.

CAUTION — DO NOT WELD TO OR MODIFY PERFORMANCE STRUTS/SHOCKS IN ANY WAY. DAMAGE TO UNIT MAY OCCUR AND WILL VOID WARRANTY.

Installation Diagram

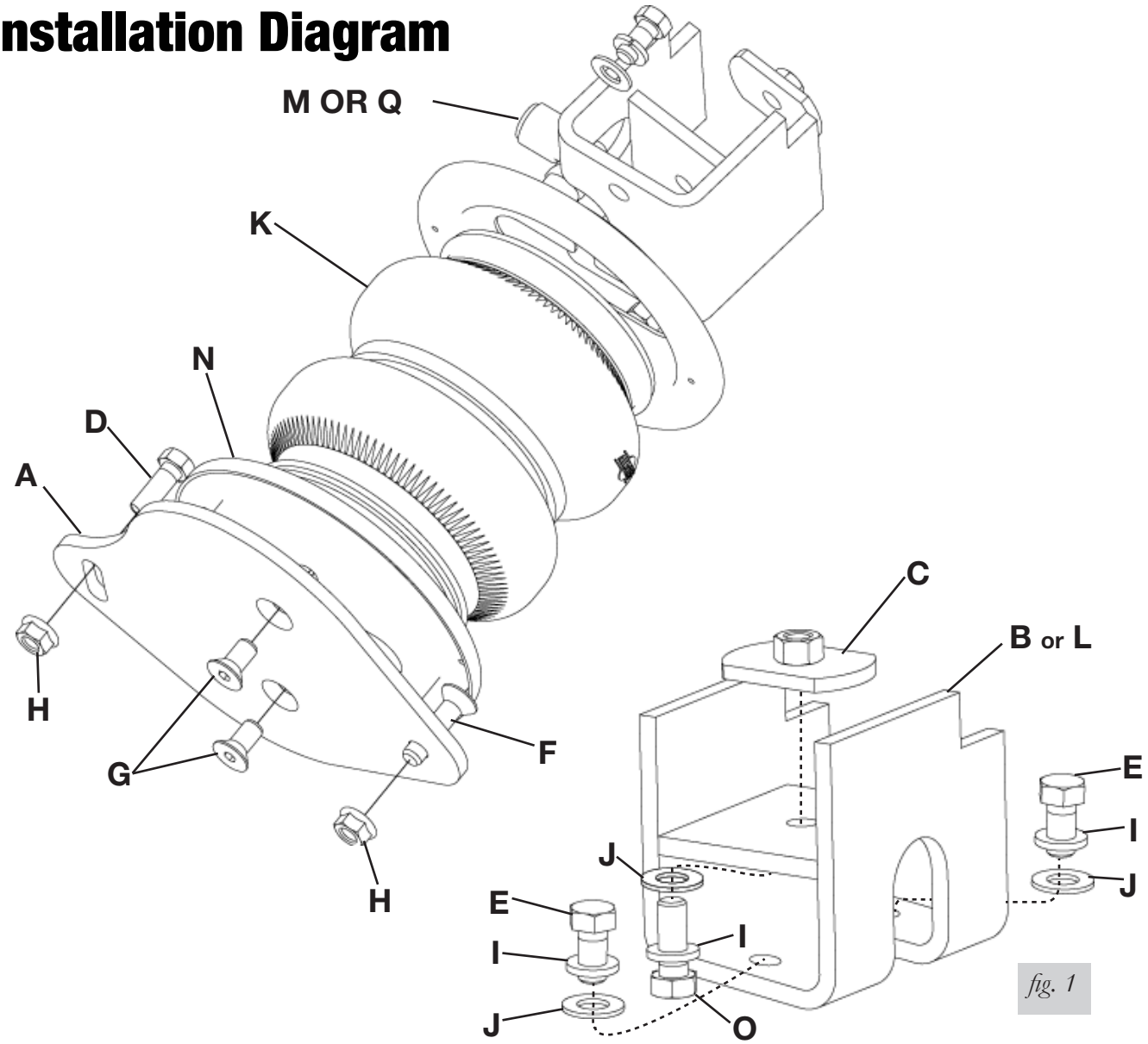

fig. 1

HARDWARE LIST

ITEM	PART #	DESCRIPTION	QTY
A	03614	REAR BOTTOM PLATE.	2
B	07325	UPPER BRACKET ASM - LEFT REAR	1
C	10814	CLAMP PLATE	2
D	17107	3/8”-16 X 1 HEX BOLT	2
E	17203	3/8”24 X 3/4 HEX BOLT	4
F	17206	3/8”-16 X 1.5 COUNTERSINK CAP SCREW	2
G	17215	3/8”-24 X 3/4 COUNTERSINK CAP SCREW	4
H	18422	3/8” FLANGE NUT	4
I	18427	3/8” LOCK WASHER	8
J	18444	3/8” FLAT WASHER	8
K	58449	2B6 AIR BAG W/ 3/8” ZYTEL	2
L	07416	UPPER BRACKET ASM - RIGHT REAR	1
M	21846	FITTING 3/8MNPT	2
N	11801	ROLL PLATE	4
O	17188	3/16”-16 X 1.25 HEX BOLT	2
P	18544	.25” SPACER (NOT SHOWN)	2
Q	21867	FITTING 1/4MNPT	2

Installing the Air Suspension

PREPARING THE VEHICLE

1. Elevate the vehicle and support the body with a hoist or jack stands.
2. Remove rear tire.

REMOVING THE REAR SHOCK

NOTE *Driver's side shown.*

1. Remove two upper retaining bolts from the shock's upper mount. Save for later reinstallation (fig. 2).
2. Remove lower shock bolt, nut, and washer. Save for later reinstallation (fig. 2).
3. Remove shock. Save for later reinstallation.

Left side installation shown.

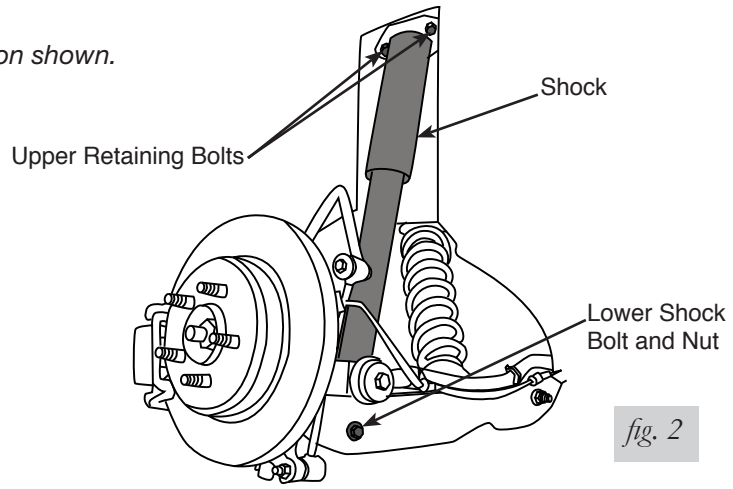

fig. 2

REMOVING THE COIL SPRING

1. Insert and tighten an internal coil spring compressor.
2. Remove lower spring link bolt

WARNING MAKE SURE TENSION IS OFF OF THE COIL SPRING.

3. Using the internal coil spring compression tool, compress coil spring and remove (fig. 3).
4. Remove upper spring retainer bushing and discard (fig. 3).
5. Reattach lower spring link bolt. Do not tighten at this point. Read "Aligning the Vehicle."

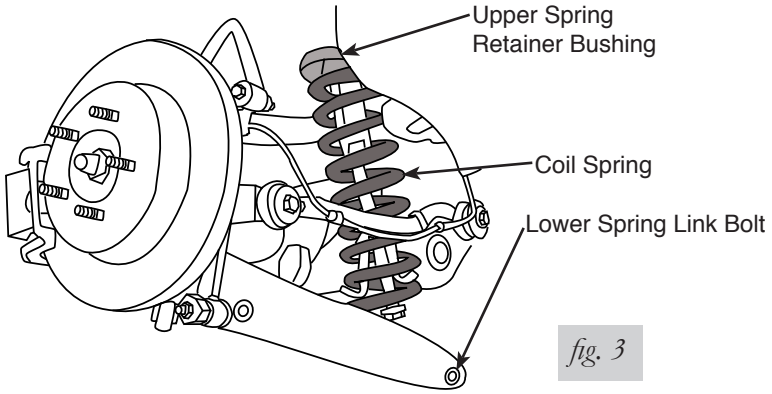

fig. 3

PREPARING REAR BAG ASSEMBLY

NOTE *Refer to fig. 1 for detailed assembly.*

1. Install supplied air fitting (M) into air bag assembly before attaching the upper bracket (B). Seal with teflon tape or thread sealant.

NOTE *Determine where the air line will run. When running 1/4" line, the fitting can face inboard allowing the bracket to protect the connection.*

2. Insert the 3/8"-16 x 1 1/2" countersink cap screw into the lower mounting plate before installing the bag assembly.
3. Apply the roll plates (N) to the top and bottom of the air spring assembly. Orient as shown in fig. 5.
4. Attach lower mounting plate using supplied 3/8"-24 x 3/4" countersink cap screw. Torque to 27 Nm (20 lb.-ft.)
5. Using supplied 3/8"-24 x 3/4" hex bolts, lock washers, and flat washers, attach the upper bracket assembly. The upper bracket window/air port faces toward the outside of the vehicle. Torque the bolts to 27 Nm (20 lb.-ft.).

INSTALLING BAG ASSEMBLY

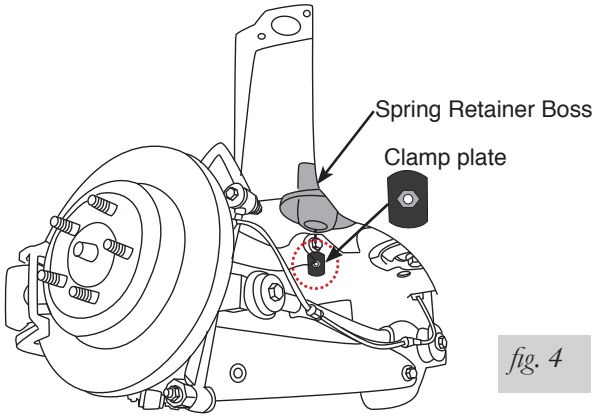

fig. 4

1. Insert clamp plate into spring retainer boss with the nut facing upward (fig. 4).
2. Collapse assembly and slide into stock coil spring location.

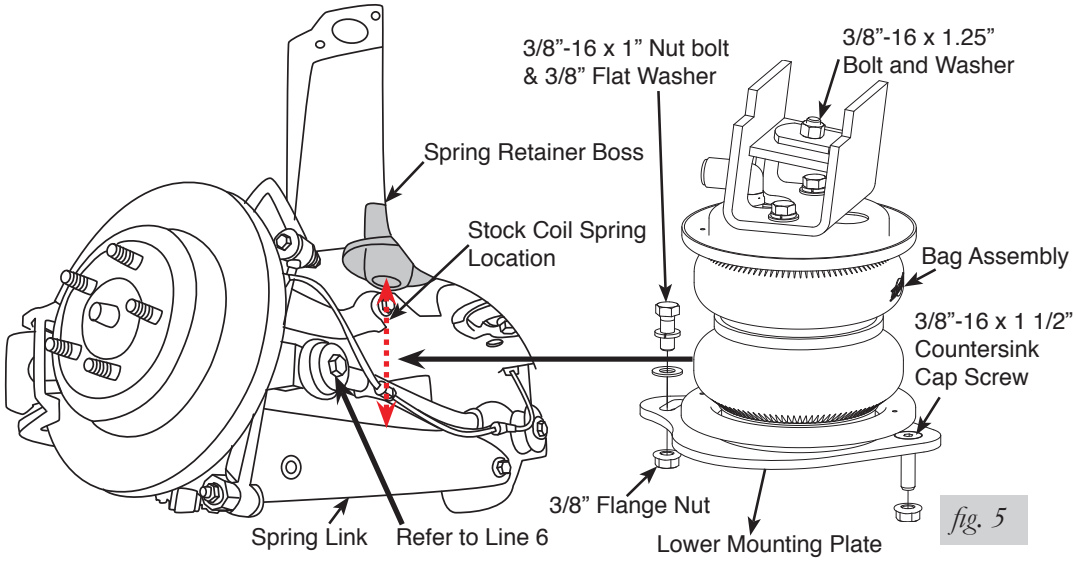

fig. 5

3. Insert and snug nuts and bolts into existing holes required for lower spring link (fig. 5).
4. Use a jack to raise spindle so the upper bracket assembly locates in the upper spring pocket.
5. Insert supplied 3/8”-16 x 1.25” bolt and washer into upper mount clamp plate until finger tight (fig. 6).

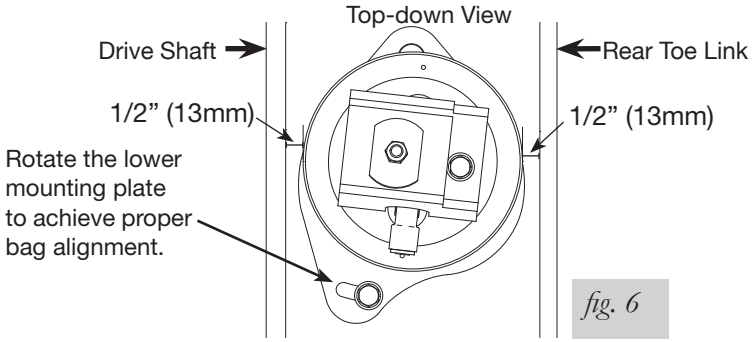

fig. 6

6. Insert 1/4” spacer between the toe link and knuckle. Unthread toe link bolt and install spacer and bolt. Do not tighten at this point (fig. 7). Read “Aligning the Vehicle.”

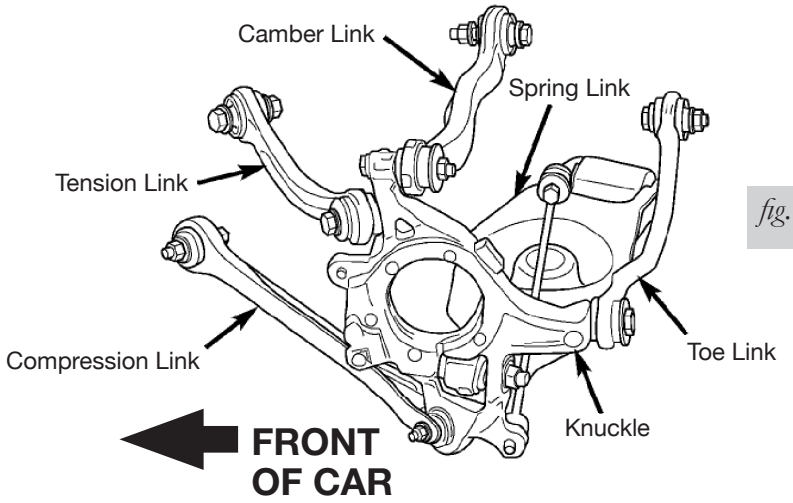

fig. 7

7. Rotate the bag assembly and lower mounting plate for proper bag alignment. There should be 1/2” (13mm) clearance between the completed assembly and the drive shaft and rear toe link. Cycle suspension through its travel and check clearances throughout. Adjust accordingly.
8. Deflate the assembly, making adjustments as needed.
9. Reinstall the shock with original upper retaining bolts (52 Nm [38 lb.-ft.]) and the lower shock bolt (72 Nm [53 lb.-ft.]), nut and washer.

ROUTING THE AIR LINES

1. Fully compress the suspension using a jack. With the suspension compressed, review the best routing for the air line that is clear of all suspension components and axle.
2. Routing should also allow for the suspension to extend without kinking or pulling the line tight or rubbing on other components. Following the brake line routing is often a good place to start. Check clearances to all other components.

Tips for Installing the Air Lines

CUTTING AIR LINES

When cutting air lines, use a sharp knife or a hose cutter and make clean, square cuts (fig. 8). Do not use scissors or wire cutters because these tools will deform the air line, causing it to leak around fittings. Do not cut the lines at an angle.

The minimum bend radius for 1/4" air line is 1" (25mm). The minimum bend radius for 3/8" air line is 1.5" (38mm). Do not bend the air line less than the minimum bend radius or side load the fitting connections. Air lines are to be installed straight into fittings.

Inspect the air line for scratches that run lengthwise prior to installation. Contact Air Lift customer service at **(800) 248-0892** if the air line is damaged.

To watch a video demonstrating proper air line cutting, go to air-lift.co/cuttingairline

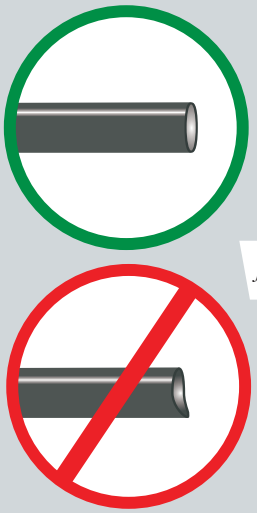

fig. 8

PUSH-TO-CONNECT (PTC) FITTINGS

Air lines should be pushed into the push-to-connect fittings firmly, with a slight side-to-side rotational twist. Check the connection by pulling on each line to verify a robust connection.

NOTE

To release the air line from the connection (fig. 9), first release all air from the system. Push in on the air line (step 1), push the collar in (step 2), and with the collar depressed, pull the air line out of the fitting (step 3).

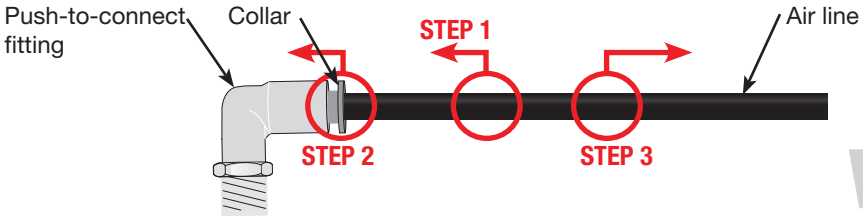

fig. 9

CHECKING FOR LEAKS

1. Inflate the air spring to 75-90 PSI (5.2-6.2BAR).
2. Spray all connections with a solution of liquid dish soap and water. Spot leaks easily by looking for bubbles in the soapy water.
3. After the test, deflate the springs to the minimum pressure required to restore the system to normal ride height.
4. Check the air pressure again after 24 hours. A 2-4 PSI (.14-.28BAR) loss after initial installation is normal. Retest for leaks if the loss is more than 5 PSI (.34BAR).

FIXING LEAKS

1. If there is a problem with the push-to-connect fitting, remove the air line as described above. Trim 1" (25mm) off the end of the air line. Be sure the cut is clean and square (see fig. 8).
2. Reinsert the air line into the push-to-connect fitting as described above.

Before Operating

SETTING THE RIDE HEIGHT

1. With the suspension fully compressed, take a measurement from the fender to a chosen reference point – typically the center of the axle. Record this measurement as max compression (MC).
2. Cycle the suspension to max extension (ME) and record the measurement from the fender to the same reference point.
3. Add ME and MC, then divide the total by 2. Set the suspension to this point. This position will give 50% stroke in either direction and is a starting point for ride height (fig. 10).

Formula for Calculating Ride Height
(ME+MC)÷2=MID STROKE

fig. 10

4. With the suspension at this position, loosen, then re-torque all suspension bushing pivot joint fasteners to the manufacturer's specifications (Table 1):

Torque Specifications		
Description	Nm	Lb.-ft.
Camber Link Crossmember Bolt	85	63
Camber Link Knuckle Bolt	98	72
Compression Link Crossmember Bolt	85	63
Compression Link Knuckle Bolt	81	60
Shock Absorber Mounting Bolts - Upper	52	38
Shock Absorber Mounting Bolt Nut - Lower	72	53
Spring Link Crossmember Bolt	108	80
Spring Link Knuckle Nut	138	102
Stabilizer Bar Isolator Retainer Bolts	61	45
Stabilizer Link Nuts	61	45
Tension Link Crossmember Bolt	85	63
Tension Link Knuckle Bolt	98	72
Toe Link Crossmember Nut	108	80
Toe Link Knuckle Bolt	81	60

Table 1

Suggested Driving Air Pressure	Maximum Air Pressure
75 PSI (5.2BAR)	**125 PSI (8.6BAR)**
FAILURE TO MAINTAIN ADEQUATE MINIMUM PRESSURE (OR PRESSURE PROPORTIONAL TO LOAD) MAY RESULT IN EXCESSIVE BOTTOMING OUT AND **WILL VOID THE WARRANTY**.	

Table 2

CHECK FOR BINDING

1. Inflate and deflate the system (do not exceed 125 PSI [8.6BAR]) to check for clearance or binding issues. With the air springs deflated, check clearances on everything so as not to pinch brake lines, vent tubes, etc. Clear lines if necessary.
2. Inflate the air springs to 75-90 PSI (5.2-6.2BAR) and check all connections for leaks.

⚠ CAUTION

MAKE SURE THE FRONT WHEELS ARE STRAIGHT WHEN DEFLATING AND REINFLATING AIR BAGS.

ALIGNING THE VEHICLE

1. Set the vehicle to the height at which it will most often be driven.
2. If the ride height is lower than stock, Air Lift Performance recommends loosening all pivot points (bolts, nuts) on any control arm, strut arm or radius rod that contains bushings (fig. 7). Once they have been loosened, re-torque to stock specifications (Table 1).

NOTE

It may be necessary to cycle the suspension to loosen the bushing from its mount. This will help re-orient the bushing at its new position based on the chosen ride height.

3. Get a shop alignment of the vehicle at the new chosen ride height.

INSTALLATION CHECKLIST

☐ **Clearance** — Inflate the air springs to 75-90 PSI (5.2-6.2BAR) and make sure there is at least 1/2" (13mm) clearance from anything that might rub against the air spring. This should be checked with the air spring fully inflated and fully deflated.

☐ **Leak** — Inflate the air springs to 75-90 PSI (5.2-6.2BAR) and check all connections for leaks. All leaks must be eliminated before the vehicle is road tested.

☐ **Heat** — Be sure there is sufficient clearance from heat sources, at least 6" (152mm) for air springs and air lines. If a heat shield was included in the kit, install it. If there is no heat shield, but one is required, call Air Lift customer service at **(800) 248-0892**.

☐ **Fastener** — Recheck all bolts for proper torque.

☐ **Road** — Inflate the springs to recommended driving pressures (Table 2). Drive the vehicle 10 miles (16km) and recheck for clearance, loose fasteners and air leaks.

☐ **Operating instructions** — If professionally installed, the installer should review the operating instructions with the owner. Be sure to provide the owner with all paperwork that came with the kit.

POST-INSTALLATION CHECKLIST

☐ **Overnight leak down test** — Recheck air pressure 24 hours after installation and driving of the vehicle. If the pressure has dropped more than 5 PSI (.34BAR), there is a leak that must be fixed.

☐ **Air pressure requirements** — It is important to understand the air pressure requirements of the air spring system. Regardless of load, the air pressure should always be adjusted to maintain adequate ride height at all times while driving.

☐ **Thirty-day or 500-mile (800km) test** —Recheck the air spring system after 30 days or 500 miles (800km), whichever comes first. If any part shows signs of rubbing or abrasion, the source should be identified and moved, if possible. If it is not possible to relocate the cause of the abrasion, the air spring may need to be remounted. If professionally installed, the installer should be consulted. Check all fasteners for tightness.

Use, Maintenance and Servicing

1. An Air Lift air management system is strongly recommended for this product, but it is possible to operate without one. The air lines can be routed to Schrader valves for use with a separate air compressor. Air lines and Schrader valves are not included with Air Lift Performance kits and would need to be purchased separately. To learn more about Air Lift management systems visit **air-lift.co/productlines**.
2. Check the air pressure before driving.

⚠ WARNING

BEFORE SERVICING THE VEHICLE, MAKE SURE TO TURN OFF "RISE ON START" AND "PRESET MAINTAIN." THIS WILL ELIMINATE ANY UNINTENDED SUSPENSION CYCLING IF YOU NEED TO TURN THE KEY ON IN THE VEHICLE FOR ANY REASON.

TUNING THE AIR PRESSURE

Pressure determination comes down to three things — level vehicle, ride comfort and stability.

1. **Level vehicle**
   Depending on load, it is possible one side will need more pressure than the other to level the vehicle.
2. **Ride comfort**
   If the vehicle has a harsh ride, it may be due to either too much pressure or not enough causing frequent bottoming out. Also, riding the vehicle at the top, or close to the top of the available stroke will cause an uncomfortable ride due to a lack of rebound travel. This situation should be avoided for driving any significant distance. Try different pressures to determine the best ride comfort. See the Air Lift suggested driving air pressure for this vehicle (Table 2).
3. **Stability**
   Stability translates into safety and should be the priority, meaning the driver may need to sacrifice a perfectly level and comfortable ride. Stability issues include roll control, bounce, dive during braking and sponginess. Tuning out these problems usually requires additional air pressure, damping or both.

TROUBLESHOOTING GUIDE

PROBLEM	CAUSE	SOLUTION
Air spring won't maintain pressure.	Leak at fitting, air line not cut properly or damage to air line during installation.	Find location of leak by spraying listed components with soapy water solution and look for bubbles. Tighten air fitting, re-cut air line or replace damaged components.
	Leak at lower O-ring on damper if air spring is over the damper.	Spray bottom of air spring with soapy water solution and look for bubbles. Contact Air Lift customer service at **(800) 248-0892** to determine if component should be replaced.
Knocking noise when hitting bumps.	Loose suspension component such as loose end link.	Check and tighten suspension components to factory specs at desired ride height.
	Driving vehicle too close to maximum extension.	Check current ride height and compare to maximum height. If there is less than 1" (25mm) difference, reduce air pressure to lower ride height.
		Lengthen strut or shock to increase available up travel.
Suspension bottoms out.	Air pressure is too low, causing air springs to bottom out.	Raise air pressure.
The ride is too bouncy or harsh.	Air pressure is too high, causing air springs to be too stiff.	Lower air pressure if necessary to achieve proper ride height.

Notes

Limited Warranty and Return Policy

Air Lift Company provides a 1-year limited warranty to the original purchaser of Air Lift Performance damper kits from the date of original purchase, that the products will be free from defects in workmanship and materials when used on vehicles as specified by Air Lift Company and under normal operating conditions, subject to the requirements and exclusions set forth in the full Limited Warranty and Return Policy that is available online at **www.airliftperformance.com/warranty**.

For additional warranty information contact Air Lift Company customer service.

Replacement Part Information

If replacement parts are needed, call Air Lift customer service. Most parts are immediately available and can be shipped the same day.

Contact Air Lift Company customer service at (800) 248-0892 first if:

- Parts are missing from the kit.
- Need technical assistance on installation or operation.
- Broken or defective parts in the kit.
- Wrong parts in the kit.
- Have a warranty claim or question.

Contact the retailer where the kit was purchased:

- If it is necessary to return or exchange the kit for any reason.
- If there is a problem with shipping if shipped from the retailer.
- If there is a problem with the price.

Contact Information

Mailing address	P.O. Box 80167 Lansing, MI 48908-0167
Shipping address for returns	2727 Snow Road Lansing, MI 48917
Phone	Toll free: (800) 248-0892 International: (517) 322-2144
Email	service@airliftcompany.com
Web address	www.airliftcompany.com

Air Lift Company reserves the right to make changes and improvements to its products and publications at any time. For the latest version of this manual, contact Air Lift Company at **(800) 248-0892** or visit **www.airliftperformance.com**.

Need Help?

Contact Air Lift Company customer service department by calling (800) 248-0892. For calls from outside the USA or Canada, dial (517) 322-2144.

CONNECT BY SEARCHING FOR **AIR LIFT PERFORMANCE** *#LIFEONAIR*

Thank you for purchasing Air Lift Performance products!

Air Lift Performance • 2727 Snow Road • Lansing, MI 48917 or P.O. Box 80167 • Lansing, MI 48908-0167
Toll Free (800) 248-0892 • Local (517) 322-2144 • Fax (517) 322-0240 • www.airliftperformance.com

Printed in the USA
BGL-0617