Kits 75678/78633

Audi A4 B6/B7 Platform

Rear Application
(With and Without Shocks)

INSTALLATION GUIDE

For maximum effectiveness and safety, please read these instructions completely before proceeding with installation.

Failure to read these instructions can result in an incorrect installation.

MN-760 • (051908) • ERN 9070

TABLE OF CONTENTS

Introduction

Air Lift Performance thanks you for purchasing the most complete, fully engineered high-performance air suspension made for the Audi A4 (B6/B7 Platform). Read these installation instructions to correctly and safely set up the vehicle for a #lifeonair.

Air Lift assumes that the installer has the mechanical knowledge and ability to work on vehicle suspension systems and has basic tools necessary to complete the project. Special tools needed to complete the installation are noted on the *Installation Diagram* page.

Air Lift reserves the right to make changes and improvements to its products and publications at any time. For the latest version of this manual, contact Air Lift Performance at **(800) 248-0892** or visit **www.airliftperformance.com**.

An Air Lift Performance air management system is highly recommended for this product. Learn more at **air-lift.co/productlines**.

NOTATION EXPLANATION

Hazard notations appear in various locations in this publication. Information which is highlighted by one of these notations must be observed to help minimize risk of personal injury or possible improper installation which may render the vehicle unsafe. Notes are used to help emphasize areas of procedural importance and provide helpful suggestions. The following definitions explain the use of these notations as they appear throughout this guide.

DANGER — INDICATES IMMEDIATE HAZARDS WHICH WILL RESULT IN SEVERE PERSONAL INJURY OR DEATH.

WARNING — INDICATES HAZARDS OR UNSAFE PRACTICES WHICH COULD RESULT IN SEVERE PERSONAL INJURY OR DEATH.

CAUTION — INDICATES HAZARDS OR UNSAFE PRACTICES WHICH COULD RESULT IN DAMAGE TO THE MACHINE OR MINOR PERSONAL INJURY.

NOTE — *Indicates a procedure, practice or hint which is important to highlight.*

Important Safety Notices

WARNING — DO NOT INFLATE AIR SPRINGS WHILE OFF OF THE VEHICLE. DAMAGE TO ASSEMBLY MAY RESULT AND VOID WARRANTY.

CAUTION — DO NOT WELD TO OR MODIFY PERFORMANCE STRUTS/SHOCKS IN ANY WAY. DAMAGE TO UNIT MAY OCCUR AND WILL VOID WARRANTY.

Installation Diagram

HARDWARE LIST

Item	Part #	Description	Qty
A	26931	Shock, rear Audi B6/B7	2
B	17931	M10-1.5 x 20 Flat-head socket cap screw	4
C	13328	Spacer, upper	2
D	11801	Roll plate	4
E	58556	Air spring, 2B6	2
F	13309	Spacer, lower	2
G	17516	M10-1.5 x 25 Socket-head cap screw	4
H	18630	10.5 x 30 x 2.5 Flat washer	2
I	18628	M10 Split lock washer	2
J	17930	M10-1.5 x 60 Hex-head cap screw	2
K	21745	1/4” MNPT x 1/4” PTC	2
L	21853	1/4” MNPT x 3/8” PTC	2
M	11289	M50 Spanner	1

TOOLS LIST

Description	Qty
Standard and metric open-end or boxed wrenches	Set
Standard and metric regular and deep-well sockets	Set
Ratchet	1
Torque wrench	1
Hose cutter, razor blade, or sharp knife	1
Hoist or floor jack	1
Safety stands	2
Safety glasses	1
Air compressor or compressed air source	1
Spring compressor	1
Spray bottle with dish soap/water solution	1

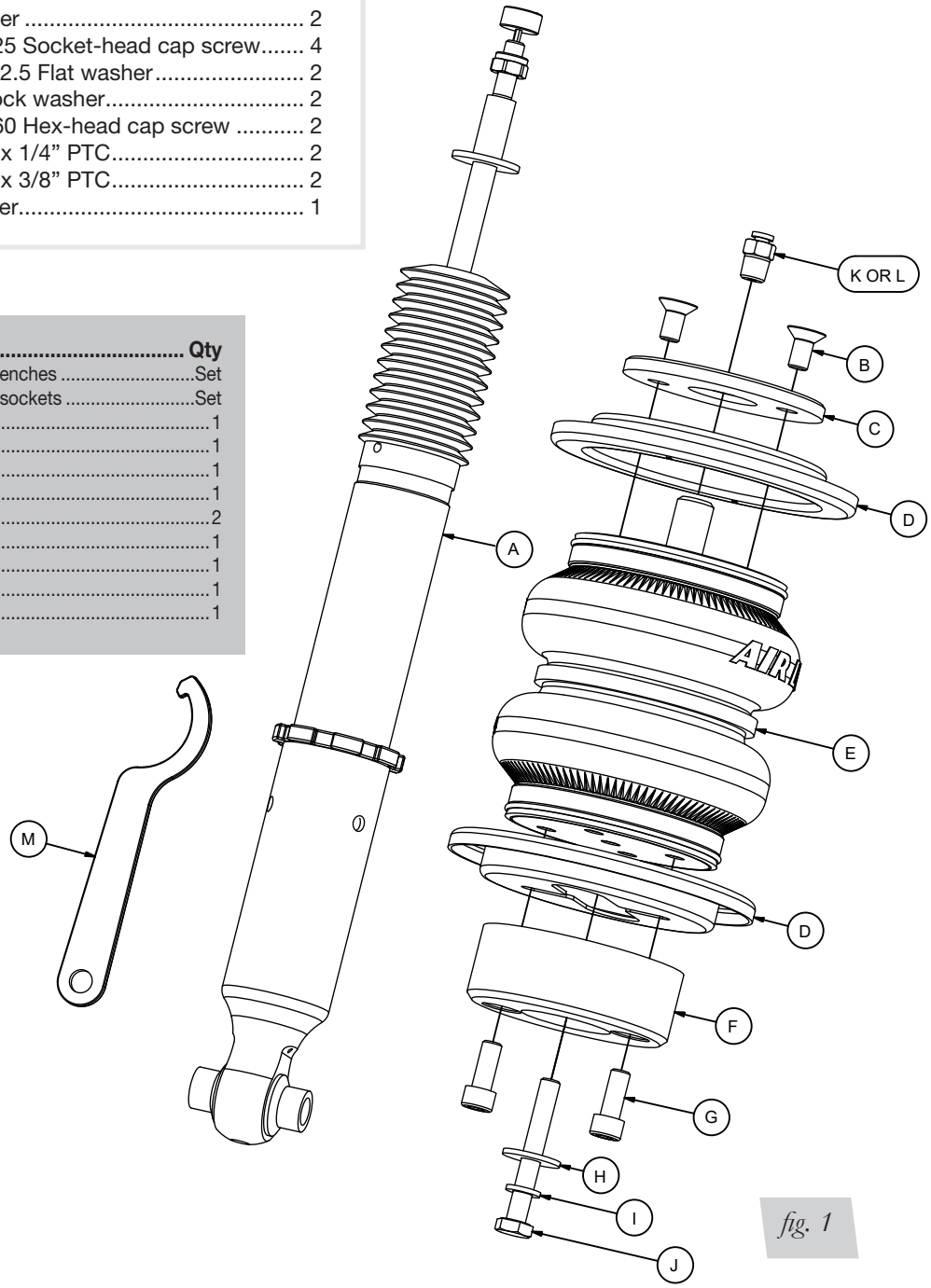

fig. 1

STOP! Missing or damaged parts? Call Air Lift customer service at (800) 248-0892 for a replacement part.

Installing the Air Suspension

PREPARING THE VEHICLE

1. Support the vehicle with safety stands or a hoist at approved lifting points.
2. Remove the rear wheels.

NOTE *If equipped with a headlight alignment system, disconnect the range control linkage first (Fig. 2).*

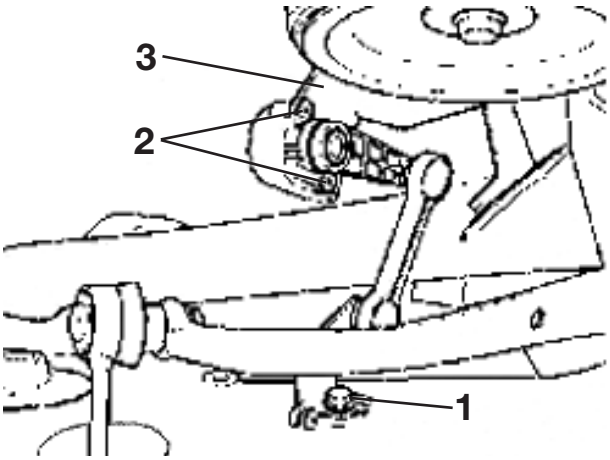

fig. 2

REMOVAL OF STOCK SUSPENSION

1. Support the hub assembly before beginning work.
2. Remove the inner fender liners from both sides (Fig. 3).

fig. 3

3. Unbolt the upper and lower shock mounts and remove from vehicle (Figs. 4-6).

fig. 4

fig. 5

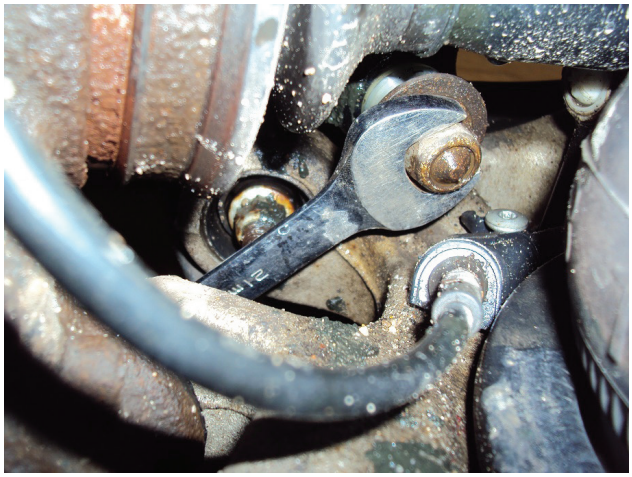

fig. 6

4. If retaining the factory shocks, continue to step 5. Remove the nut from the top of the shock rod. Retain the upper mounting bracket for later use (Fig. 7).

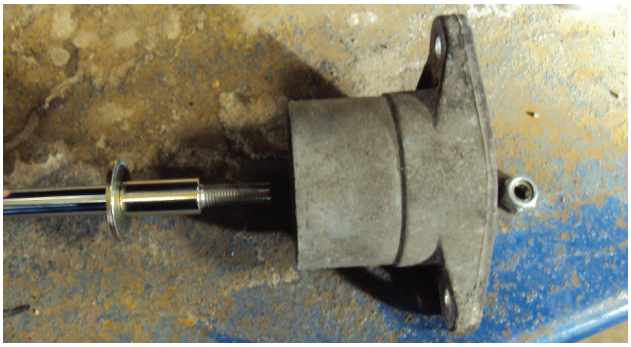

fig. 7

DANGER

THE COIL SPRING IS UNDER COMPRESSION. THE COIL SPRING SHOULD BE REMOVED USING FACTORY PRESCRIBED GUIDELINES.

5. Using a coil spring compressor, remove the rear coil springs along with upper and lower isolators (Figs. 8-10).

fig. 8

fig. 9

fig. 10

6. Directly above the upper coil spring seat, remove the rubber plug (Figs. 11 & 12).

fig. 11

fig. 12

INSTALLING THE KIT COMPONENTS

1. If retaining the factory shocks, continue to step 3. Take the OEM upper mount and bolt onto the chassis. Insert a punch through the center of the OEM upper mount and center-punch a dimple into the chassis (Figs. 13 & 14). Remove the OEM upper bracket. Before drilling, make sure there is nothing to be damaged on the top side of the shock housing. Then drill a 3/8” hole at the dimpled center mark (Fig. 15). Damping settings can be adjusted through this hole.

fig. 13

fig. 14

fig. 15

2. Remove the nylon lock nut from the top of the supplied shock rod. Leave the washer and spacer on the shock rod as received and cap with the OEM upper mount. Thread the nylon lock nut on the shock rod (Figs. 16 & 17). **DO NOT USE AN IMPACT WRENCH. If an impact wrench is used, damage will occur to the shock.** Tighten the nylon lock nut on the shock rod to 27Nm (20 lb.-ft.).

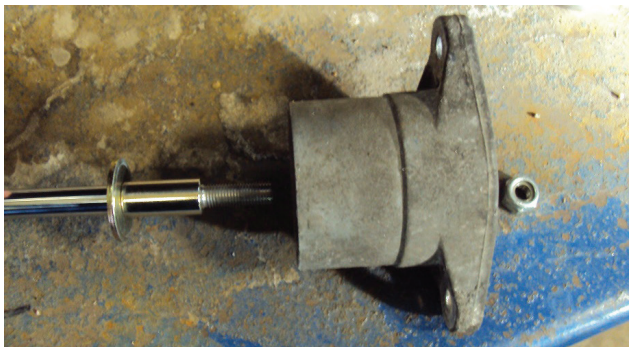

fig. 16

fig. 17

3. Attach the shock to the vehicle chassis and torque upper bracket bolts to 35Nm (26 lb.-ft.). Attach but do not tighten the lower shock mount at this time.
4. Tighten the appropriate fitting to the air spring 1 3/4 turns beyond hand-tight (Fig. 18).

fig. 18

5. Collapse the air spring and install over the lower coil spring seat with the boss going through the vehicles upper coil spring seat (Fig. 19). With the air spring assembly fully seated at the upper spring seat, check the clearance around the roll plate (Fig. 20). Some vehicles may need a slight clearance modification to the chassis.

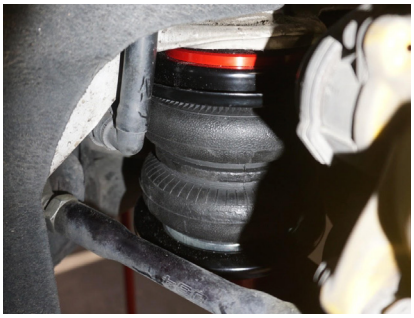

fig. 19

fig. 20

6. Carefully run the air line through the plug that was removed previously and through the upper spring perch hole (Fig. 21). Connect the hose into the air spring (Fig. 22).

fig. 21

fig. 22

7. Install the supplied washer, lock washer, and bolt. Thread into the air spring assembly through the lower control arm (Fig. 23). Torque to 20Nm (15 lb.-ft.).

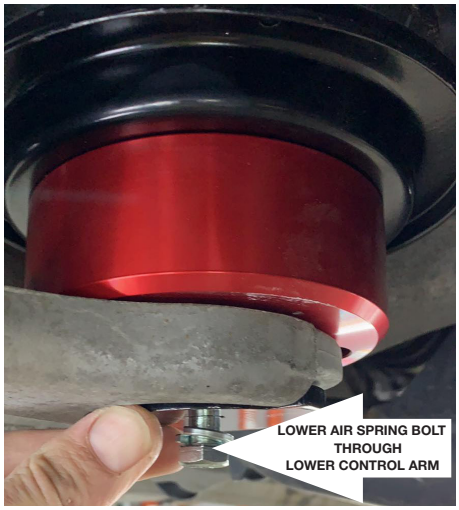

fig. 23

8. At this point, securely route the air line away from heat sources and suspension components (Fig. 24). Best practice is to route the air line behind the fender liner paying close attention to shock travel. Failure to protect the line from the shock may result in a kinked air line.

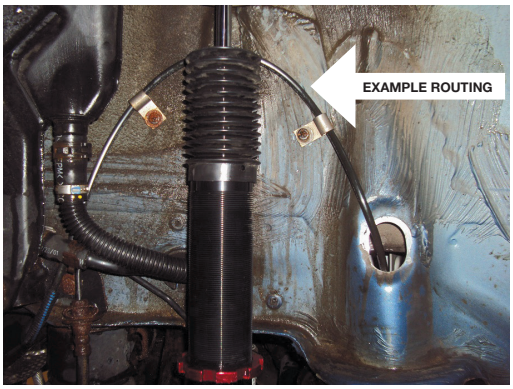

fig. 24

9. Compress the suspension fully and check clearance around the air spring and air line. Quattro models may require some trimming of the roll plate to clear the axle at a lowered height (Fig. 25). If doing so, make sure there are no sharp edges when finished.

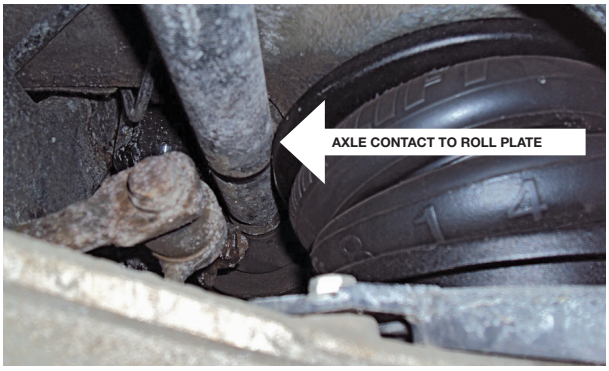

fig. 25

ROUTING THE AIR LINES

1. Fully compress the suspension using a jack. With the suspension compressed, review the best routing for the air line that is clear of all suspension components and axle.
2. Routing should also allow for the suspension to extend without kinking or pulling the air line tight or rubbing on other components. Following the brake line routing is often a good place to start. Check clearances to all other components.

Before Operating

SETTING THE RIDE HEIGHT

1. Refer to the User Guide provided with this kit to set up your air suspension.

Torque Specifications		
Location	Nm	lb.-ft.
OEM upper mount to shock rod	27	20
Shock to chassis	35	26
Spring seat spacer to air spring assembly	20	15
Upper bracket to chassis	75	55
Upper control arms to bracket	50Nm + 90 degrees	37 lb.-ft. + 90 degrees
Upper control arms to steering knuckle	40	30
Track control link to shock clevis	90	66
Track control link to subframe	125	92
Guide link to subframe	125	92
End link to track control link	50 Nm + 90 degrees	37 lb.-ft. + 90 degrees
End link to sway bar	40 Nm + 90 degrees	30 lb.-ft. + 90 degrees
Wheel lugs	120	89

Table 1

Suggested Driving Air Pressure	Maximum Air Pressure
60 PSI (4.1BAR)	**125 PSI (8.6BAR)**
FAILURE TO MAINTAIN ADEQUATE MINIMUM PRESSURE (OR PRESSURE PROPORTIONAL TO LOAD) MAY RESULT IN EXCESSIVE BOTTOMING OUT AND **WILL VOID THE WARRANTY**.	

Table 2

CHECK FOR BINDING

1. Inflate and deflate the system (do not exceed 125 PSI [8.6BAR]) to check for clearance or binding issues. With the air springs deflated, check clearances on everything so as not to pinch brake lines, vent tubes, etc. Clear lines if necessary.
2. Inflate the air springs to 75-90 PSI (5.2-6.2BAR) and check all connections for leaks.

⚠ CAUTION

MAKE SURE THE FRONT WHEELS ARE STRAIGHT WHEN DEFLATING AND REINFLATING AIR BAGS.

DAMPING ADJUSTMENT

Suspension damping is a matter of compromise. Setting it too stiff will make the ride feel jarring. In addition, if the suspension is too stiff, the tires will lose contact with the road, reducing control and power delivery. On the other hand, if the suspension is too soft, the car can experience brake dive and excessive bouncing. The sweet spot lies somewhere in the middle. Air Lift dampers have a range of adjustment, which allows the driver to tune the ride and handling to his or her preferences.

Air Lift recommends damper and air pressure settings for every vehicle kit, but it is impossible to consider every situation. For example, even though Air Lift kits replace the dampers and springs, vehicles with sport-tuned suspensions might have stiffer bushings, larger anti-roll bars, bigger wheels, wider tires, etc. These settings may need to be adjusted to different vehicles and driving characteristics.

1. The dampers in this kit have 30 settings, or “clicks,” of adjustable compression and rebound damping characteristics. Damping is changed through the damper rod using the supplied adjuster (Figs. 26 & 27) or an 3mm hex key (not included).
2. Turn the adjuster clockwise (H) and the damping settings are hardened, reducing oscillations and body motion. Turn the adjuster counterclockwise (S) and the damping is softened.
3. Each damper in this kit is preset to “-13 clicks.” This means that the damper is adjusted 13 clicks away from full stiff, which starts at 0. Counting up from full stiff is the preferred method of keeping track of, or setting, damping. This setting was developed on a 2002 Audi A4 1.8T Quattro.

fig. 26

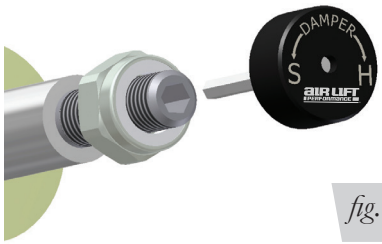

fig. 27

INSTALLATION CHECKLIST

- ☐ **Clearance** — Inflate the air springs to 75-90 PSI (5.2-6.2BAR) and make sure there is at least 1/2” (13mm) clearance from anything that might rub against the air spring. This should be checked with the air spring fully inflated and fully deflated.
- ☐ **Leak** — Inflate the air springs to 75-90 PSI (5.2-6.2BAR) and check all connections for leaks. All leaks must be eliminated before the vehicle is road tested.
- ☐ **Heat** — Be sure there is sufficient clearance from heat sources, at least 6" (152mm) from air springs and air lines. If a heat shield was included in the kit, install it. If there is no heat shield, but one is required, call Air Lift customer service at **(800) 248-0892**.
- ☐ **Fastener** — Recheck all bolts for proper torque.
- ☐ **Road** — Inflate the air springs to recommended driving pressures (Table 2). Drive the vehicle 10 miles (16km) and recheck for clearance, loose fasteners and air leaks.
- ☐ **Operating instructions** — If professionally installed, the installer should review the operating instructions with the owner. Be sure to provide the owner with all paperwork that came with the kit.

Limited Warranty and Return Policy

Air Lift Company provides a 1-year limited warranty to the original purchaser of Air Lift Performance damper kits from the date of original purchase, that the products will be free from defects in workmanship and materials when used on vehicles as specified by Air Lift Company and under normal operating conditions, subject to the requirements and exclusions set forth in the full Limited Warranty and Return Policy that is available online at **www.airliftperformance.com/warranty**.

For additional warranty information contact Air Lift Company customer service.

Air Lift Company reserves the right to make changes and improvements to its products and publications at any time. For the latest version of this manual, contact Air Lift Company at **(800) 248-0892** or visit **www.airliftperformance.com**.

Need Help?

Contact Air Lift Company customer service department by calling (800) 248-0892. For calls from outside the USA or Canada, dial (517) 322-2144.

CONNECT BY SEARCHING FOR **AIR LIFT PERFORMANCE** *#LIFEONAIR*

Thank you for purchasing Air Lift Performance products!

MADE IN USA WITH GLOBAL COMPONENTS

Air Lift Performance • 2727 Snow Road • Lansing, MI 48917 or P.O. Box 80167 • Lansing, MI 48908-0167
Toll Free (800) 248-0892 • Local (517) 322-2144 • Fax (517) 322-0240 • www.airliftperformance.com

Printed in the USA
JJC-0819

California: ⚠WARNING: Cancer and Reproductive Harm – www.P65Warnings.ca.gov